MASCHIO

ROTARY TILLER RANGE

MASCHIO GASPARDO: THE STRENGTH'S IN THE NAME

The MASCHIO GASPARDO group's rotary tiller is the company's longest standing product.
Manufactured for over 50 years in the main Campodarsego facility, where the R&D department develops the latest material processing technologies to found its own established methods in order to deliver a high-quality finished product built to last.
MASCHIO GASPARDO has something for everyone, with equipment catering to the small-scale vegetable gardener through to the most serious farmers and contractors, with power draw ranging from 10 to 380 hp.

AGRONOMIC BENEFITS

- Excellent seedbed preparation
- Fast sowing
- Uniform levelling
- Even germination

CONTENTS

PAINSTAKING ATTENTION TO DETAIL 4

FIXED FRAME 8

FOLDING FRAME 18

ROLLERS 26

PANTERA

PAINSTAKING ATTENTION TO DETAIL

The right speed every time

The gearbox with built-in speed change is available either as standard or to order. With this feature, using a special set of gears, speed can be changed to suit requirements and the type of ground.

Central chassis

Depending on the model, the central frame can have a one-piece construction made from 4mm-thick sheet metal or consist of two sheets ranging from 3+3 mm to 5+5 mm on the heavier models.

Track eradicator

All MASCHIO rotary tillers, except the lighter models, can be fitted with a track eradicator device, with either a simple pointed or delta-shaped tip, with a shear bolt or spring safety system.

The track eradicators work by the tractor's wheels, reducing ridges and compaction left by the wheels and creating a more even seedbed.

Anti-clogging kit

The only one of its kind, the mechanical anti-clogging device consists of a high-density polyethylene membrane. (Available on SC PRO, G, PANTERA L, PUMA, PANTERA and JANE)

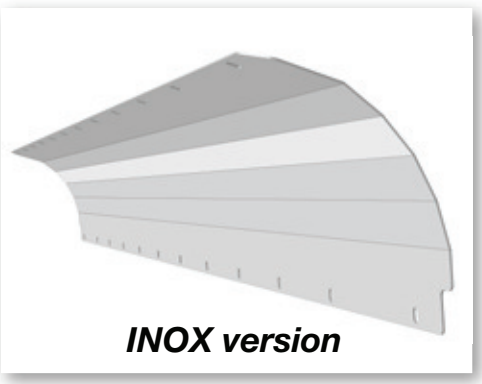

INOX version

Since 1964
MASCHIO GASPARDO has always been one of the most popular brands for purchasers in the market for a rotary tiller, though it is the painstaking product design and its meticulous attention to every last detail that is the real trademark of the Group. With an extensive array of models and optional extras to choose from, farmers will always find a solution suited to their needs and can rest assured that their implement will deliver years of high performance.

Bonnet adjustment
The bonnet is adjusted by means of a rod, which can be sprung, mechanical or a hydraulic cylinder depending on the model.
By lowering or lifting the bar, soil tilling can be adjusted to produce a finer or coarser tilth.

Levelling bonnet
The rear levelling bonnet, with its progressive sloping profile and greater width at the leading edge, ensures consistently optimal levelling.
In addition, a strengthening bar has been added to ensure the bonnet can withstand a hammering during work.

Depth adjustment
A toothed bar and a single bolt make a quick and practical system for setting side skids to control the working depth, making the job of adjusting depth so much easier than with many of the competition's systems.

Side drive
Depending on the model, the MASCHIO GASPARDO rotary tillers can be fitted with a side chain drive - on the lighter models - or a 3- or 4-gear drive on more professional models.

GET THE JOB DONE RIGHT WITH THE RIGHT TOOL!

Ready for any challenge
An important feature of the MASCHIO GASPARDO rotary tillers is their versatility and ability to adapt. With an extensive range of rotors to choose from, farmers will always find the right answer to their tillage needs.

STANDARD BLADE ROTOR

The Standard Blade rotor can accommodate 2 types of blades, C-shaped and L-shaped, designed for ultimate soil finishing and working crop residue into the ground.
Blades are arranged helically around the rotor, resulting in the blades entering the soil progressively and thus reducing power draw.
Tungsten coating on blades can be ordered as an optional extra, reducing their wear considerably.

- Universal use

C-shaped blade

L-shaped blade

COBRA ROTOR

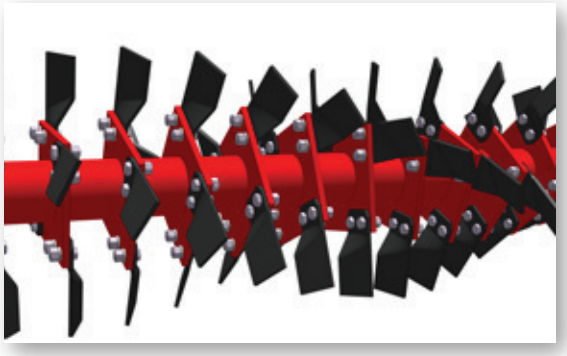

The Cobra rotor is used for work in hard, dry conditions, following ploughing or on compact soil.
The closely packed blades on the rotor ensure clods are broken down perfectly to a fine tilth, creating an excellent seedbed.

- Hard dry soils

(Available on SC, G, PUMA, PANTERA)

CONDOR ROTOR

The Condor rotor caters to the requirements of all those farmers dealing with very stony ground as the special shape of the tools prevents the sort of damage the blades would normally be exposed to, minimizing the downtime that comes with replacing broken blades.

-Stony ground

(Available on SC, G, PUMA, PANTERA)

BLADE QUICK RELEASE: a perfect fit

Time is money
The new patented MASCHIO GASPARDO quick-release system lets you replace blades **in a quarter of the time** it would take using the classic twin-bolt release system.

Available on models: G, PUMA, PANTERA AND PANTERA L

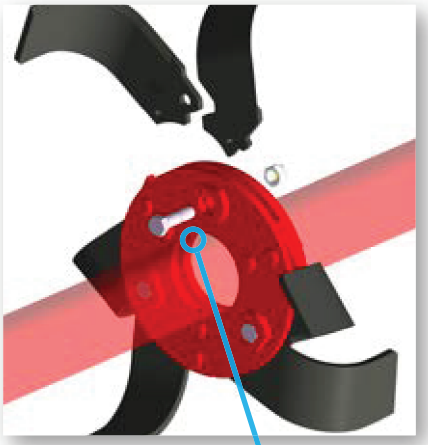

1 bolt for 2 blades
The job of replacing the blades is speeded up as it involves releasing just one bolt.

Innovative design
The system works by having two blades slotted together and held in place by two reinforced counter-flanges. Thus, the fist blade will have a bolt for its release while the second, slotted into the first, cannot move until the first blade is released, meaning just one bolt needs to be released to remove 2 blades.

Standard 12 bolts

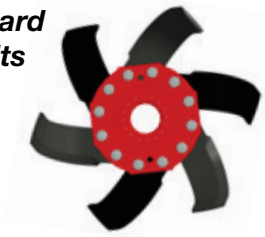

Quick-fit 3 bolts

SIDE DRIVE: 1000 rpm you wouldn't know were there

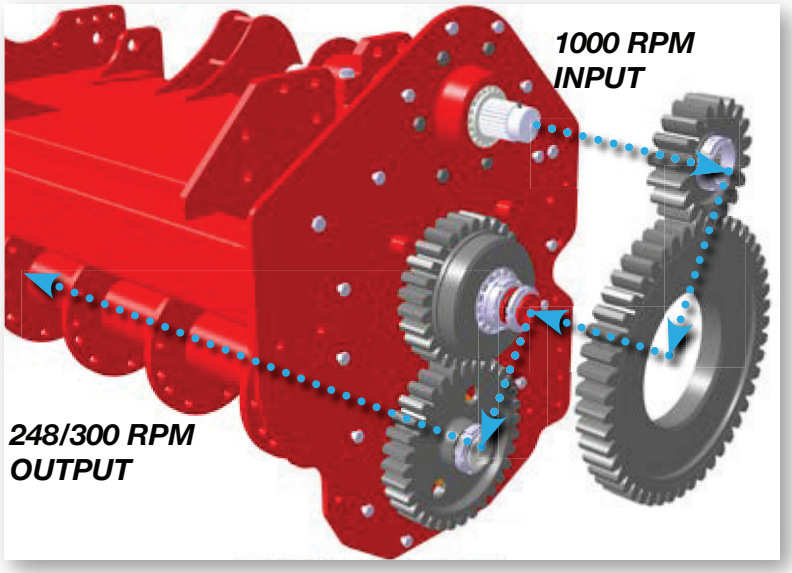

4UATTRO+

The 4UATTRO + system uses 4 heavy-duty gears as the side drive to reduce rotor speed.
This system greatly eases mechanical stress on the central gearbox's bevel gears and on the side PTO shafts, thus giving the machine greater lasting reliability.

Details that make the difference
An additional strength of the side drive lies in the special shape of the gears' teeth.
The teeth have been specially machined to ensure that less heat is produced, and hence ensure that the oil inside the housing does not heat up and no cooling system is required, while noise levels and wear are also reduced considerably.

Fixed frame from 10 to 60 hp

L, A and W
these are the entry-level MASCHIO GASPARDO rotary tillers, which can be paired with light, low-powered tractors, ranging from 10 to 60 hp. Small and lightweight, they are particularly well suited to gardening applications, to use by vegetable gardeners and to inter-row tillage in orchards and vineyards. With their compact design, they can easily be used in domestic situations, too, and for maintenance of green space areas.
On all models, depth control is achieved via the side skids, which are easy to adjust by means of an adjuster screw system.

Gearbox
All models feature a single-speed gearbox for reducing rotor rpm, with oil level measured directly via the filler cap.

Side drive
Power at the side comes from a chain system, which is greased on model L and in an oil bath on A and W models.
Drive chain tension is adjusted automatically by the chain tensioner.

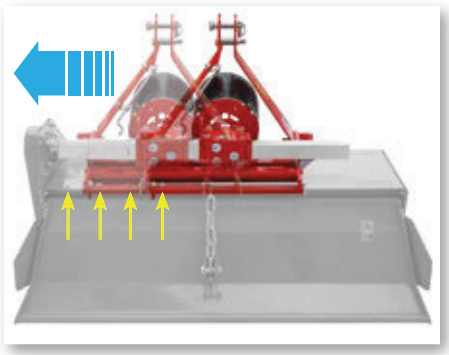

Offset
The rotary tiller unit can be offset from the 3-point hitch, making the implement extremely versatile and functional in various operating conditions (L and W models).

L MODEL

Mod.	MAX cm	MIN cm	MIN cm	MAX cm
85	42,5	27	42,5	57,5
105	52,5	32,5	52,5	72,5
115	57,5	27,5	57,5	87,5
125	62,5	32,5	62,5	92,5

W MODEL

Mod.	MAX cm	MIN cm	MIN cm	MAX cm
85	52,5	22	52,5	83
125	62,5	22	62,5	103
145	72,5	22	72,5	123
165	82,5	22	82,5	143

A MODEL

SPECIFICATIONS		L				W				A				
Working width	cm	85	105	115	125	105	125	145	165	100	120	140	160	180
Weight	kg	124	132	140	148	170	194	218	242	230	250	275	285	310
Category		I				I				I - II				
Tractor power	hp	10 to 25				15 to 40				30 to 60				
PTO shaft with shear bolt		•				-				-				
PTO shaft with slip clutch		◊				•				•				
Transmission speed	RPM	540				540				540				
Rotor revolution	RPM	254				208				208				
Offset		mechanical				mechanical				-				
4 blades per flange		•				•				•				
6 blades per flange		-				◊				◊				
Maximum working depth	cm	16				18				20				
Roller		-				-				-				

• standard ◊ optional extra - not available

Fixed frame from 30 to 80 hp

U 155

H, VIRAT and U
The H, VIRAT and U rotary tiller models, while part of the range of small machines, have many of the features of the high-end machines, making them suitable for more professional fruit farming and horticultural jobs, on small farms and in greenhouses.

Side drive
H, VIRAT and U feature 3-gear gearboxes at the side, which ensure constant transmission with no loss of power.

Amphibious seals
The amphibious mechanical seals consist of two metal rings facing each other with a fine film of oil separating them. This system ensures the rotor bearings are entirely isolated from mud, water and dust. It also allows the equipment to work immersed in water in rice fields.

Rear bonnet
Working on stony ground, the new extra strong levelling bonnets provide greater wear resistance.
Their curved shape means perfect soil levelling can be achieved in all conditions.
They feature sprung rods for adjusting height.

H MODEL

VIRAT MODEL

U MODEL

SPECIFICATIONS		H					VIRAT					U					
Working width	cm	125	145	165	185	205	125	145	165	185	205	130	140	155	180	205	230
Weight	kg	326	350	385	408	437	347	375	410	433	461	380	400	420	460	500	550
Category		I - II					I - II					II					
Tractor power	hp	30 to 70					30 to 70					35 to 80					
PTO shaft with slip clutch		•					•					•					
Transmission speed	RPM	540					540					540					
Multispeed rotor revolutions	RPM	• (215) - ◊					• (166-185-230-258)					• (178-201-227-256)					
Track eradicator kit		◊					◊					◊					
Side disc ploughshares		◊					◊					◊					
Maximum working depth	cm	22					22					22					
Roller		-					-					◊					

• standard ◊ optional extra - not available

Fixed frame from 45 to 130 hp

B and C

With the B and C models, MASCHIO GASPARDO introduces its range of professional equipment, high-end machines that are continuously being improved on both the technical and mechanical front.
The heavy-duty frame, PTO shaft with slip clutch and multi-speed gearbox make these rotary tillers hard-wearing and reliable, ideal for mid-sized tractors.
The C model also stands out for its extreme versatility, being able to reach a PTO of 1000 rpm and run at 324 rpm, thus achieving a finer tilth.

SILVA with offset

The SILVA model with operator-controlled hydraulic offset allows you to comfortably handle all jobs between rows and under tree limbs and branches that orchard and vineyard work inevitably entails.
As an optional extra, SILVA comes with a side-mounted gearbox allowing for an even greater offset.

B SUPER

The B model has been taken to the next level with the B SUPER version, which has had its rotor boosted from 540 mm Ø to 560 mm Ø, featuring blade flanges made from high-strength steel and skids for adjusting depth from 12 to 20 mm.

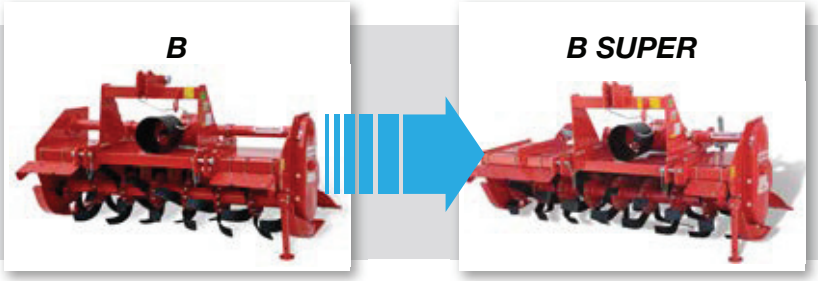

Longevity guaranteed

The only one of its kind in the market and indeed in the whole MASCHIO GASPARDO rotary tiller range, the B SUPER tiller features a pair of tempered steel skids up to 5 times stronger than their classic counterparts.

SILVA MODEL

Mod.	MAX cm	MIN cm	MIN cm	MAX cm
160	80	40	80	120
185	92,5	52,5	92,5	132,5
205	105	65	105	145

B MODEL

C MODEL

CARATTERISTICHE TECNICHE		SILVA			B (*B SUPER*)				C				
Working width	cm	160	185	205	155	180	205	230	205	230	250	280	300
Weight	kg kg	500	550	595	573 (*578*)	620 (*625*)	686 (*690*)	735 (*740*)	720	778	829	925	940
Category			II			II				II			
Tractor power	HP		40-80			45 a 100				60 a 130			
PTO shaft with slip clutch			•			•				•			
Cam PTO shaft			-			-				◊			
Transmission speed	RPM		540			540				540 / 1000*			
Multispeed rotor revolutions	RPM		178-201-227-256			140-174-215-266				143-175-214-272			
Spostamento laterale			•			-				-			
Track eradicator kit			-			◊				◊			
Side disc ploughshares			-			◊				◊			
Maximum working depth	cm		22			25				25			
Counter-flanges			-			◊				◊			
Roller			-			◊				◊			

• standard ◊ optional extra - not available * 1000 RPM: 265-324

Fixed frame from 90 to 170 hp

SC and SC PRO
these rotary tillers cater to the needs of mid-sized farmers and contractors. It belongs to the large rotary tiller category and has been designed to work in particularly tough conditions. The new mechanical frame and extensive range of accessories mean excellent results can be achieved on any type of ground. Designed to work with tractors up to 170 hp.

3 rotor options
The SC implement's main distinguishing feature is that it can be fitted with 3 different rotor types.
1 - Standard Blade rotor in normal work conditions;
2 - Cobra rotor on dry and very hard ground;
3 - Condor rotor on stony ground.

SC PRO
The SC PRO model differs from the SC model in a number of key areas:
Rear radiator;
Option of anti-clogging kit;
Synthetic oil in gearbox;
Option of fitting 570mm rotor compared to the 540mm version on the SC

Combi version
For versions with a rear roller, there is the option of combining the equipment with the COMPAGNA broadcast seeder. This is a practical solution for cutting forage and cereal crop seeeding times and costs.

SC PRO (ORGANIC KIT)

The SC PRO Organic Kit version meets the demands of farmers wanting to prepare a seedbed without compacting the soil and contributing to its erosion, working at shallower depths and higher speeds (up to 10 km/h) than regular rotary tillers, while retaining the residue in the top few cm of soil, thus improving its structure and the amount of organic matter present. The resulting soil finishing means it can be used both for preparing seedbeds for crops on a field scale, like maize and wheat, and for vegetable crops.

AGRONOMIC BENEFITS

- High work rates
- Shallow tillage (from 5 to 10 cm)
- Effective mixing back in and cutting of residue thanks to active tillage
- Residue quickly turns into humus
- Mechanical weed control
- Decreased soil erosion

SC MODEL

CARATTERISTICHE TECNICHE		SC			
Working width	cm	230	250	280	300
Weight	kg	1202	1310	1393	1498
Category		II			
Tractor power	CV	90 a 170			
PTO shaft with slip clutch		•			
Cam PTO shaft		◊			
Transmission speed	RPM	540 / 1000			
Multispeed rotor revolutions	RPM	133-172-220 / 182-246-300			
Cobra/Condor rotor		◊			
Track eradicator kit		◊			
Side disc ploughshares		◊			
Maximum working depth	cm	25			
Counter-flanges		◊			
Anti-clogging kit		◊			
Roller		◊			

• standard ◊ optional extra - not available

Fixed frame from 120 to 320 hp

G

this is the best option for seedbed preparation in the toughest conditions, such as tillage directly on compact soil or summer tillage when dealing with stubborn dry soil. The various rotor options (Standard Blade, Cobra, Condor) and numerous optional extras available mean G can be adapted to suit all conditions and farming practices. The 570mm rotor mounted on heavy-duty roller bearings allows soil to be tilled down to a maximum depth of 29 cm.

Anti-clogging kit

A rather attractive optional extra is the anti-clogging system: a high-density polyethylene membrane that stops clinging/wet soil from clogging up the machine.
Available on SC PRO, G, PANTERA L and PANTERA models.

Gearbox

The standard G model comes with a 1000 rpm PTO gearbox giving 258 rotor rpm.
To achieve a finer tilth, an extra-powerful gearbox can be fitted, reaching 330 rotor rpm.

DT 420 version (Dual drive)

The DT version features dual side drive for improved power transmission and even load distribution, making it possible to pair the machine with tractors up to 320 hp. The upper drive's two side PTO shafts are protected by a metal cover for longer service life.

G MODEL

CARATTERISTICHE TECNICHE		G			
Working width	cm	275	300	350	420 DT
Weight	kg	1810	1930	2095	2685
Category		III - IV			
Tractor power	CV	120 a 320			
Cam PTO shaft		•			
Transmission speed	RPM	1000			
Multspeed rotor revolutions	RPM	258 (optionale 330)			
Cobra/Condor rotor		◊			
Track eradicator kit		◊			
Side disc ploughshares		◊			
Maximum working depth	cm	27			
Counter-flanges		◊			
Anti-clogging kit		◊			
Roller		◊			

• standard ◊ optional extra - not available

Folding frame from 120 to 240 hp

PUMA
this is a strong yet light folding rotary tiller catering to medium-large farms and to contractors as it successfully combines a high level of soil finishing with good hourly work rates. With an on-road width of just 215 cm and lighter weight, it is suitable for frequent travel between jobs. In addition, the relatively light weight is a big advantage as it means the machine can be paired with tractors in the mid power range.

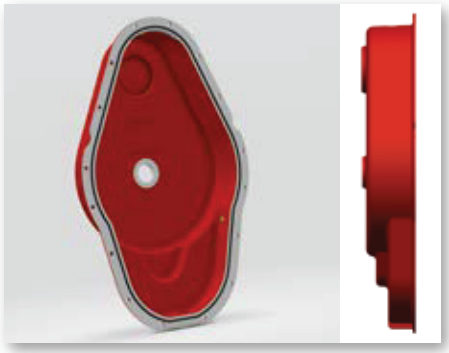

Transmission cover
All professional G, PUMA, PANTERA L and PANTERA models feature a transmission cover made from ductile iron, which is much stronger than regular grey cast iron.
The cover has a groove on the inside housing a rubber gasket that slots inside, rather than being pushed in, providing a much more effective seal to protect gears from dust and water ingress.
Available on G, PUMA, PANTERA L, PANTERA and JANE models.

Track eradicator
MASCHIO GASPARDO rotary tillers can be fitted with a track eradicator device, with either a simple pointed or delta-shaped tip, with a shear bolt or spring safety system.

Even greater strength
For the toughest soil conditions, the MASCHIO GASPARDO rotary tillers can be ordered with a counter-flange kit that makes for an even more sturdy connection between the blades and rotor.
Available as an optional extra on B, C, SC, G, PUMA, PANTERA L, PANTERA and JANE models.

PUMA MODEL

SPECIFICATIONS		PUMA			
Working width	cm	320	370	420	470
Weight	kg	2225	2410	2600	2875
Category		II			
Tractor power	CV	120 a 240			
Side cam PTO shafts		•			
Transmission speed	RPM	1000			
Multspeed rotor revolutions	RPM	256 (345 opt)			
Cobra/Condor rotor		◊			
Track eradicator kit		◊			
Side disc ploughshares		◊			
Maximum working depth	cm	25			
Counter-flanges		◊			
Anti-clogging kit		◊			
Roller		•			

• standard ◊ optional extra - not available

Folding frame from 140 to 260 hp

PANTERA L
is a folding professional rotary tiller, a perfect marriage of power and light weight, featuring a similar frame to the PUMA model but fitted with the PANTERA's heavy rotor so as to meet the needs of farmers who do not have high-powered tractors (from 170 to 320 hp), but still want a relatively light, high-end machine capable of reaching greater working depths.

No time wasting
PANTERA L features a new all-metal PTO shaft guard design so as to avoid the breakages inevitably associated with the classic plaster cover.
Making its maintenance even simpler, the grease point has a practical sheet metal access cover for easy PTO shaft greasing.

REVERSE model
On the PANTERA L REVERSE model, the tilling rotor can rotate in the opposite direction. Combined with a sifting screen and a levelling blade, it allows soft, finely tilled soil to be brought to the surface, making subsequent mechanical seeding or planting that much easier. Ideal for a wide range of vegetable crops, both in greenhouses and in the open field.

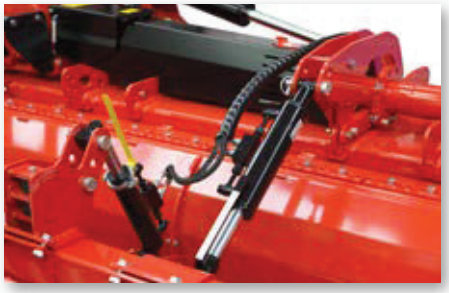

Everything within your reach
On all high-end SC PRO, G, PUMA, PANTERA L and PANTERA models, the rear bonnet and roller can feature fully hydraulic control, ensuring that all adjustments can be made from the comfort of the tractor's cab.

PANTERA L

PANTERA L MODEL

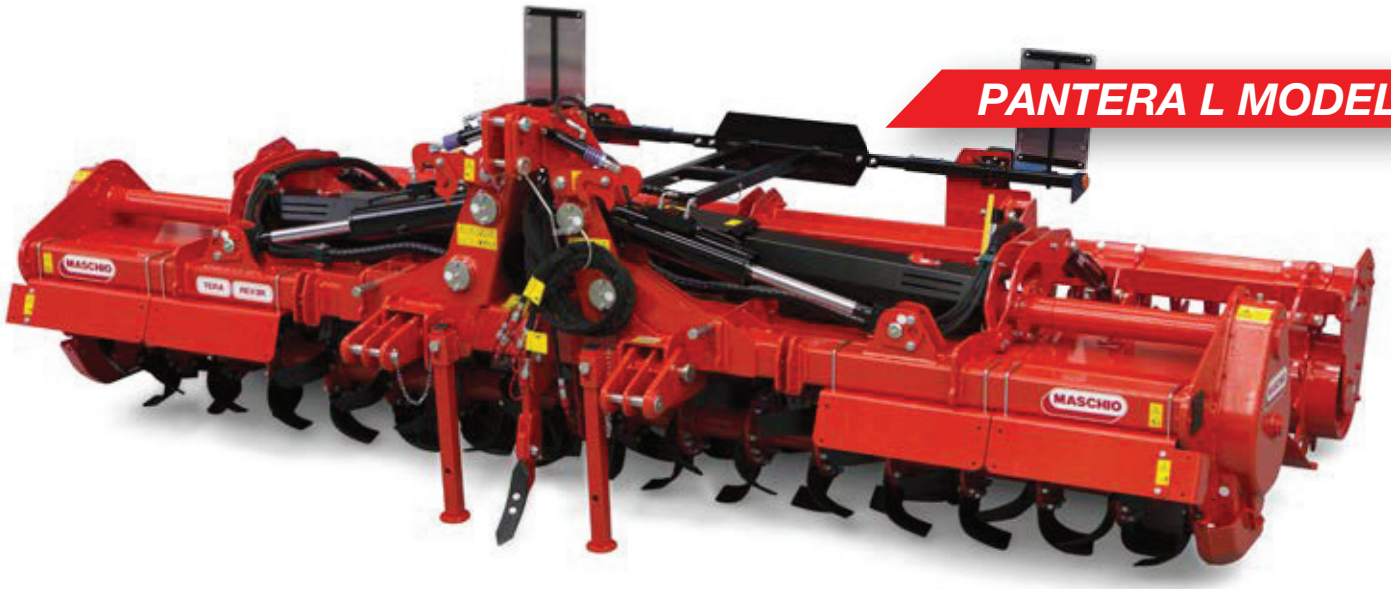

CARATTERISTICHE TECNICHE		PANTERA L		
Working width	cm	370	420	470
Weight	kg	2810	3100	3278
Category		II - III		
Tractor power	CV	170 a 320		
Side cam PTO shafts		•		
Transmission speed	RPM	1000		
Multispeed rotor revolutions	RPM	258 (330 opt)		
Cobra/Condor rotor		◊		
Track eradicator kit		◊		
Side disc ploughshares		◊		
Maximum working depth	cm	27		
Counter-flanges		◊		
Anti-clogging kit		◊		
Roller		•		

• standard ◊ optional extra - not available

Folding frame from 200 to 380 hp

PANTERA
Taking on board the needs of professionals and the significant demands of contractors and large-scale farms, we have designed and manufactured PANTERA, the folding professional rotary tiller available in five versions (420, 470, 520, 570 and 620 cm), suitable for horsepower in the 200 to 380 range. The rigid design of the frame and quality of the materials used ensure high standards of reliability and high work rates, along with easy and safe road travel.

Cooling system
The PANTERA model comes with a continuous gearbox oil cooling system as standard, ensuring unbeatable reliability during lengthy work shifts.

Strengthened A-frame
PANTERA differs from PUMA in its stronger double A-frame, with 4 pistons for lifting the two side wings: the latter feature 4 heavy-duty hinges connecting them to the frame so as to be able to cope with a horsepower up to 380.

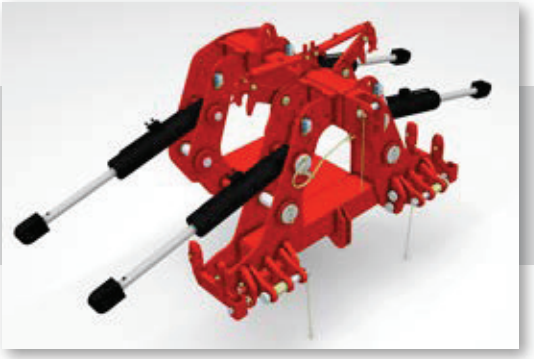

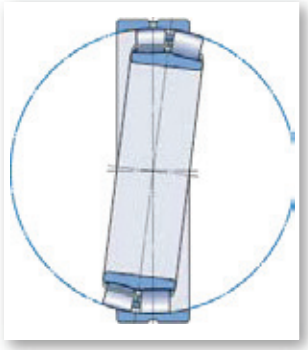

Strength and durability
The PANTERA, JANE, PANTERA L, G and SC models are fitted with high-performance bearings.
The rotatable roller bearings have been designed to handle significant radial loads, as well as axial loads in both directions.

PANTERA

PANTERA MODEL

SPECIFICATIONS		PANTERA				
Working width	cm	420	470	520	570	620
Weight	kg	3560	3780	4050	4330	4640
Category		II				
Tractor power	hp	120 a 240				
Side cam PTO shafts		•				
Transmission speed	rpm	1000				
Multispeed rotor revolutions	RPM	258 (330 opt)				
Cobra/Condor rotor		◊				
Track eradicator kit		◊				
Side disc ploughshares		◊				
Maximum working depth	cm	27				
Counter-flanges		◊				
Anti-clogging kit		◊				
Roller		•				

• standard ◊ optional extra - not available

Folding frame from 200 to 380 hp

JANE
a bed tiller designed to meet the demands of medium-large farms. It is ideal for forming seedbeds for vegetable plants, both in greenhouses and in the open field. Depth is adjusted by means of a series of cylinders located on the rear of the bed forming hood, thus ensuring that the resulting shape and depth of the bed formed are constant during the pass.
JANE is a high-end machine featuring a double A-frame with four heavy-duty hinges - connecting it to the double-beam frame - a cooling system fitted as standard and reinforced barrel bearings, making the machine compatible with tractors up to 380 hp.

ADJUSTABLE HOODS	3	4	6	8
JANE 420	A: 1400 mm B: 980 mm	A: 1100 mm B: 680 mm	A: 700 mm B: 280 mm	A: 550 mm B: 130 mm
JANE 470	A: 1600 mm B: 1180 mm	A: 1200 mm B: 780 mm	A: 800 mm B: 380 mm	A: 600 mm B: 130 mm
JANE 520	A: 1800 mm B: 1380 mm	A: 1300 mm B: 880 mm	A: 900 mm B: 480 mm	A: 650 mm B: 230 mm
JANE 570	A: 1900 mm B: 1530 mm	A: 1400 mm B: 980 mm	A: 950 mm B: 530 mm	A: 710 mm B: 290 mm
JANE 600	A: 2000 mm B: 1580 mm	A: 1500 mm B: 1080 mm	A: 1000 mm B: 580 mm	A: 750 mm B: 330 mm
JANE 620	A: 2100 mm B: 1680 mm	A: 1550 mm B: 1130 mm	A: 1050 mm B: 630 mm	A: 800 mm B: 380 mm

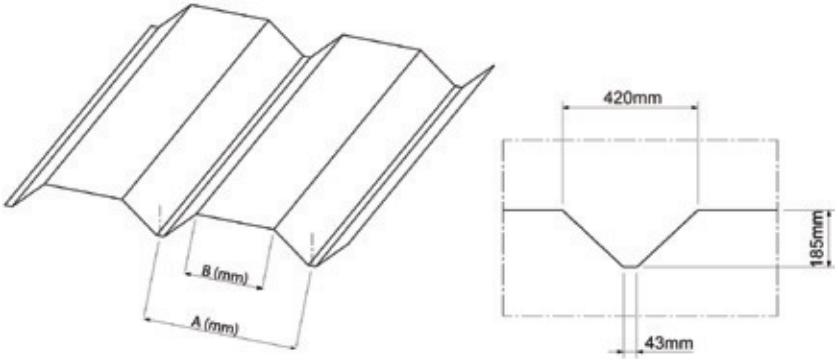

JANE

JANE MODEL

SPECIFICATIONS		JANE					
Working width	cm	420	470	520	570	600	620
Weight	kg	2870	3010	3200	3440	3600	3700
Category		IV					
Tractor power	hp	200 a 380					
Side cam PTO shafts		•					
Transmission speed	rpm	1000					
Multispeed rotor revolutions	RPM	258 (opt 330)					
Cobra/Condor rotor		◊					
Track eradicator kit		◊					
Side disc ploughshares		◊					
Maximum working depth	cm	27					
Counter-flanges		◊					
Anti-clogging kit		◊					

• standard ◊ optional extra - not available

ROLLER OPTIONS

The right roller every time
The purpose of the rear roller is to consolidate the seedbed that has been tilled to ensure optimal contact of the seed with the seedbed and the soil's moisture and hence faster and more uniform germination.
On larger machines, the roller becomes a must-have component for maintaining a consistent working depth.

REAR roller
In the event operations following tilling call for greater soil consolidation, the B and C models can be fitted with a series of rear rollers that compact the tilled layer.
Adjustment can be mechanical or hydraulic.

CAGE roller
Ø 370 mm – 450 mm – 550 mm
Used on soil with a medium consistency and when moisture conditions are not excessive.
Ensures optimal preparation in ground with normal conditions.

PACKER roller
Ø 450 mm – 500 mm – 600 mm
Used above all for autumn work, on damp ground, to further break up the soil and clods on the surface and ensure optimal compacting of the seedbed

SPIKE roller
Ø 500 mm – 600 mm
Mainly used when preparing deeply ploughed ground.
It comprises a cylinder featuring a series of long S-shaped teeth made from rods in sets of 4 per work section, spaced at 250mm intervals.

RICE FIELD roller
Ø 500 mm
Similar to the spike roller, it differs , in cylinder diameter (Ø 220 mm) and the shorter length of its spikes.
It has a load-bearing effect (superior to the spike roller) by virtue of the greater cylinder diameter.

SMOOTH roller
Ø 350/450 mm
This type of roller is used for preparing soil to be sown with vegetables, producing a level, compact seedbed. This surface makes it easier for other specific seeding or plastic mulch laying machinery to do their jobs.

SPIROPACKER roller
Ø 500 mm
Particularly suitable on light, sandy soils.
It comprises a bar with a spiral winding around a central axis.

	CAGE			PACKER			SPIKE		RICE FIELD	SPIROPACKER	SMOOTH	
	370	450	550	450	500	600	500	600	500	500	350 mm	450 mm
U	●	●		●			●				●	
B		●		●				●		●		●
C		●		●				●		●		●
SC		●		●				●		●		●
G		●	●		●	●		●		●		
PUMA		●		●			●		●	●		●
PANTERA L												●
PANTERA		●	●		●	●		●	●	●		

MASCHIO GASPARDO S.p.A.
Headquarters and production plant
Via Marcello, 73
I-35011 Campodarsego (PADOVA) - Italy
Tel. +39 049 9289810 - Fax +39 049 9289900
info@maschio.com - www.maschio.com

09-18 Cod. W00226761R
Maschio Gaspardo Marketing Dept.

For printing reasons, some pictures and images do not show the “EC” safety guards. Technical data and models shown in this catalogue are not binding. We reserve the right to revise the contents of this catalogue, to amend or improve the specifications without notice.